Overview

SITRANS WS300 is a low- to high-resolution shaft-driven speed sensor.

Benefits

- Compact and economical
- Easy, low-cost installation
- Accurate belt speed detection
- Optional resolutions for measurement over a range of belt speeds
- Corrosion resistant

Application

SITRANS WS300 speed sensor operates in conjunction with a conveyor belt scale, providing a signal to an integrator which computes the rate of material being conveyed. At only 1.22 kg (2.68 lb), it is one of the lightest and most durable units ever developed for monitoring conveyor belt speed. With its rugged cast aluminum housing, it is suitable for outdoor installation, and its low weight prolongs bearing life.

It is directly coupled to a rotating tail or bend pulley shaft to ensure accurate belt-travel readout, eliminating problems caused by belt slippage or material build-up. The WS300 converts shaft rotation into a pulse train of 32, 256, 1 000, or 2 000 pulses per revolution using a high precision rotary optical encoder. The digital signal is transmitted as speed input to any Siemens integrator for calculation of belt speed, flow rate and totalized weight.

This low- to high-resolution speed sensor provides a frequency signal proportional to the shaft speed, enabling a range of speeds to be read accurately. The quadrature type shaft encoder prevents erroneous speed signals due to vibration or shaft oscillation. The WS300 is easily mounted and is bi-directional for either clockwise or counter-clockwise belt travel.

The IS version uses an inductive proximity switch detecting rotating targets.

Design

Mounting

Mounting to a Tail Pulley

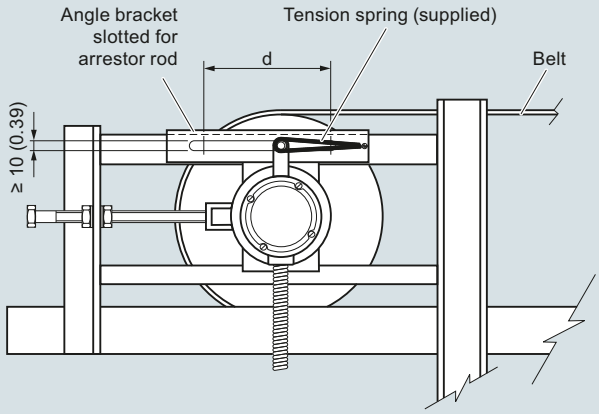

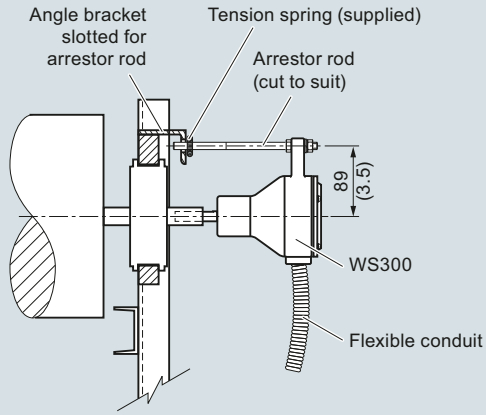

Notes:
Distance ‘d’ is the take-up travel on the tail pulley.
When adjusting the belt take-up, ensure that there is play on the arrestor rod. If the arrestor rod is pushed against the end of its travel slot, premature bearing wear may result.

Mounting to a Bend or Snub Pulley

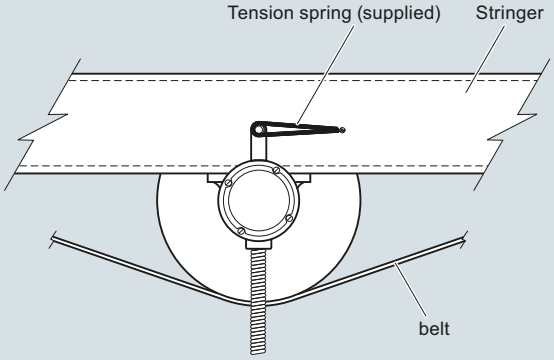

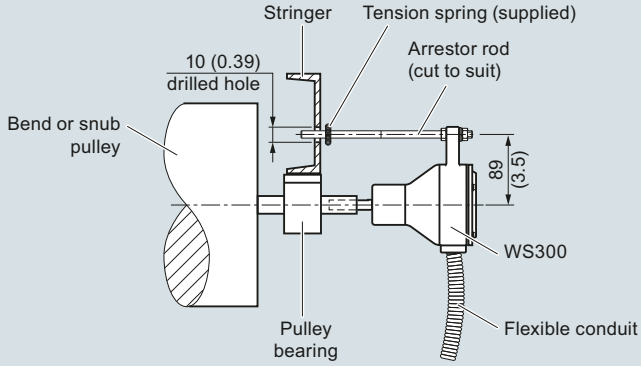

Notes:
When mounting to a bend or a snub pulley only, a 10 mm (0.39 inch) drilled hole is required for the arrestor rod.

SITRANS WS300, dimensions in mm (inch)

Mounting using optional threaded shaft coupling

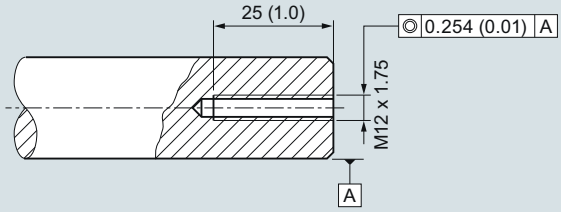

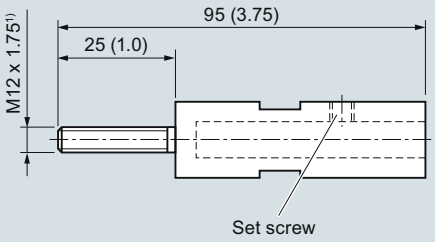

[1)] Use adhesive when installing threaded shaft coupling (e.g. Loctite).

WS300 mounting using threaded shaft coupling, dimensions in mm (inch)

Technical specifications

SITRANS WS300	
Mode of operation	
Measuring principle	Standard: pulse from shaft rotation using high precision rotary optical encoder IS: pulse from inductive proximity switch
Typical application	When a low- to high-resolution speed sensor is required
Input	Shaft rotation 0.3 … 2 000 rpm, bi-directional, resolution dependent
Output	• Unidirectional open collector, NPN, sinking output • Standard: 10 … 30 V DC, 25 mA max. • IS: NAMUR NC, load current, 0 … 15 mA • 32, 256, 1 000, or 2 000 pulses per revolution (ppr) • 32 ppr: 2 000 max. rpm, 1 066 Hz • 256 ppr: 2 000 max. rpm, 8 530 Hz • 1 000 ppr: 900 max. rpm, 15 000 Hz • 2 000 ppr: 450 max. rpm, 15 000 Hz
Rated operating conditions	
Ambient temperature	Standard: -40 … +70 °C (-40 … +158 °F) IS: -25 … +100 °C (-13 … +212 °F)
Degree of protection	NEMA 4X, Type 4X, IP65
Design	
Enclosure	• Rated NEMA 4X, Type 4X, IP65 • Painted aluminum • Stainless steel (optional)
Power supply	• Standard: 10 … 30 V DC, 60 mA max. • IS: 5 … 16 V DC, 25 mA max. (from IS switch isolator)
Cable	
Recommended	• Standard: 3-wire shielded, 0.82 mm² (18 AWG) • IS: 2-wire shielded 0.324 mm² (22 AWG) • Max. run 305 m (1 000 ft)

SITRANS WS300	
Approvals	
WS300 Standard	
• General	• CE, RCM, EAC, KCC
Hazardous	• CSA/FM Class II, Div. 1, Groups E, F, G; Class III • ATEX I M1, ATEX II 2D Ex tD A21 IP65 T70 °C • MSHA • EAC Ex, RTN • IEC Ex, Ex tD A21 IP65 T70 °C
WS300 IS (with suitable IS switch isolator or switch amplifier)[1]	• ATEX II 1G EEx ia IIC T6 • ATEX II 1D Ex iaD 20 T 108 °C • CSA/UL: Class I, Div. 1, Groups A, B, C, and D; Class II, Div. 1, Groups E, F, and G; Class III, Div. 1 • CE, RCM[2]
Proximity switch approval ratings (Pepperl+Fuchs #NJ0.8-5GM-N)	• ATEX II 1G EEx ia IIC T6 • ATEX II 1D Ex iaD 20 T 108 °C • CSA, UL • CE[2]
Optional switch isolator (required for WS300 IS)[3]	
• Pepperl+Fuchs #KFA5-SOT2-Ex2 or #KFA6-SOT2-Ex2	• ATEX II (1) G [EEX ia] IIC • CSA/UL: Class 1, Div. 1, Groups A, B, C, and D. Class II, Div. 1, Groups E, F, and G, Class III • CE[2]

[1] Approvals for WS300 IS are based on internally mounted NAMUR proximity switch (Pepperl+Fuchs #NJ0.8-5GM-N) and use of suitable IS switch isolator (amplifier). Please see WS300 operating instructions for more information.

[2] Approvals for WS300 IS are based on internally mounted NAMUR slotted proximity switch (Pepperl+Fuchs #NJ0.8-5GM-N) and use of suitable IS switch isolator (amplifier). Please see WS300 operating instructions for more information.

[3] Approval ratings for the proximity switch and IS switch isolator are the property of Pepperl+Fuchs. Copies of these approval certificates may be obtained at http://www.siemens.com/processautomation.

Selection and ordering data

	Article No.
SITRANS WS300 Speed sensor ↗	**7MH7177-** ■ ■ ■ ■ ■ **0**
Shaft mounted, 0.3 … 2 000 rpm, with up to 2 000 pulses per revolution.	
↗ Click on the Article No. for the online configuration in the PIA Life Cycle Portal.	
Resolution (pulses per revolution)	
32	**1**
256	**2**
1 000	**3**
2 000	**4**
Enclosure	
C5-M rated polyester painted aluminum, NEMA 4X	**A**
304 (1.4301) stainless steel, vibra finish NEMA 4X	**B**
Approvals	
CSA/FM Class II, Div. 1, Groups E, F, G Class III ATEX II 2D, Ex tD A21 IP65 T70 °C, EAC Ex CE, RCM, IEC Ex, Ex tD A21 IP65 T70 °C	**A**
CSA/UL Class I, Div. 1, Groups A, B, C, and D; Class II, Div. 1, Groups E, F, and G; Class III, Div. 1 ATEX II 1G, EEx ia IIC T6, ATEX II 1D Ex iaD 20 T108 °C, CE, RCM[1)2)]	**B**
CE, RCM, EAC, KCC	**D**
ATEX I, II M1,1GD, Ex ia I Ma, Ex ia IIC T4 Ga, Ex ia IIIC T135 °C Da, Ex h I Ma, Ex h IIC T4 Ga, Ex h IIIC T135 °C Da ATEX I M1, IEC Ex M1, MSHA 4[2)]	**E**
Connections	
Standard, up to 2 integrators	**1**
Multiple, up to 10 integrators	**2**
Switch isolator	
Not required	**0**
115 V AC[3)]	**1**
230 V AC[3)]	**2**
Further designs	Order Code
Please add "**-Z**" to article no. and specify order code(s).	
Acrylic coated, stainless steel tag [13 x 45 mm (0.5 x 1.75 inch)]: measuring-point number/identification (max. 16 characters), specify in plain text	**Y17**
Manufacturer's test certificate: According to EN 10204-2.2	**C11**

	Article No.
Operating instructions	
English	**7ML1998-5ML01**
Note: the operating instructions should be ordered as a separate item on the order.	
All literature is available to download for free, in a range of languages, at https://www.siemens.com/weighing/documentation	
Spare parts	
Circuit card 32 PPR, up to 2 integrators	**7MH7723-1GL**
Circuit card 32 PPR, up to 10 integrators	**7MH7723-1GK**
Circuit card 256 PPR, up to 2 integrators	**7MH7723-1GM**
Circuit card 256 PPR, up to 10 integrators	**7MH7723-1GN**
Circuit card 1 000 PPR, up to 2 integrators	**7MH7723-1GP**
Circuit card 1 000 PPR, up to 10 integrators	**7MH7723-1GQ**
Circuit card 2 000 PPR, up to 2 integrators	**7MH7723-1JL**
Circuit card 2 000 PPR, up to 10 integrators	**7MH7723-1JM**
Circuit card 32 PPR, IS	**7MH7723-1HC**
Rubber coupling	**7MH7723-1CM**
Coupling hub for 32, 256 PPR versions	**7MH7723-1CN**
Coupling hub for 1 000, 2 000 PPR versions	**7MH7723-1GR**
Enclosure cover	**7MH7723-1CJ**
Enclosure cover, stainless steel	**7MH7723-1GS**
Enclosure bearing assembly, stainless steel	**7MH7723-1GT**
Threaded shaft coupling	**7MH7723-1GH**
Arrestor rod	**7MH7723-1FV**
Arrester rod tension spring	**7MH7723-1CP**
WS300 mounting bracket for MD-36 retrofit	**7MH7723-1NB**
WS300 mounting bracket SS for MD-36 retrofit	**7MH7723-1NC**
Cable for speed sensor connection to termination box 3 cond, 18G (order per meter)[4)]	**7MH7723-1JP**
Cable for IS speed sensor connection to termination box 3 cond, 22G (order per meter)[4)]	**7MH7723-1JQ**
Pepperl+Fuchs IS switch isolator, 115 V AC	**7MH7723-1EB**
Pepperl+Fuchs IS switch isolator, 230 V AC	**7MH7723-1EC**

1) The Approval Ratings for the Proximity Switch and the IS switch isolator are the property of Pepperl+Fuchs. For current approvals, go to: https://intranet.entry.siemens.com.

2) Approval option B and E requires use of switch isolator to interface with the belt scale integrator, and is available with Resolution option 1, and Connections option 1 only.

3) For use with IS approval option B and E.

4) Cable length orders exceeding 150 m (500 ft) may not be supplied as a continuous length.

Dimensional drawings

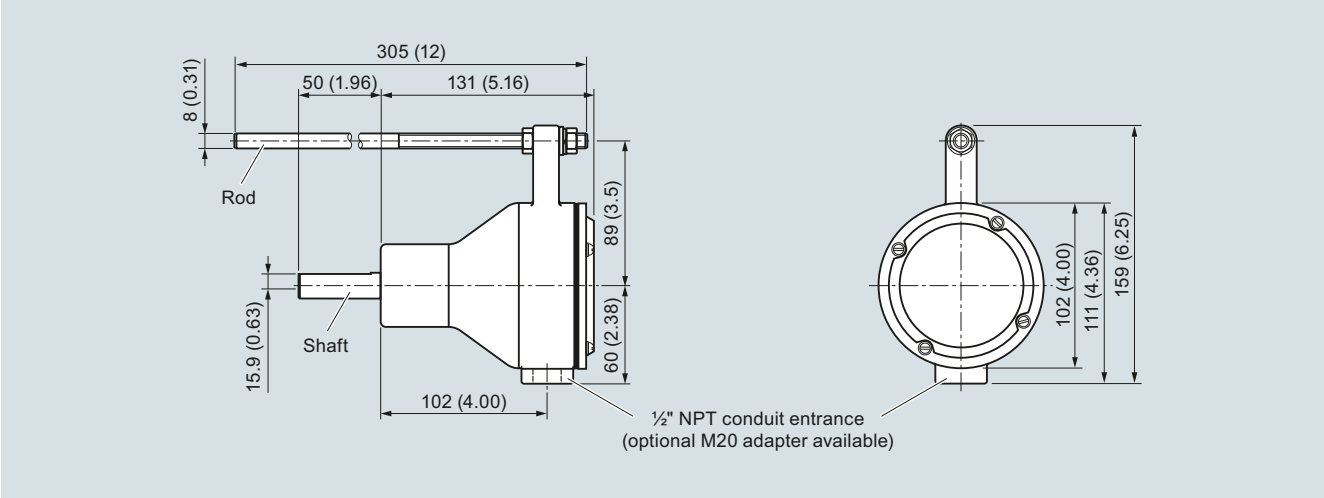

WS300, dimensions in mm (inch)

Circuit diagrams

Connections (Standard)

Description	Terminal
10 ... 30 V DC	1
Speed out-CW	2
Speed out-CCW	3
Common	4
Ground	GND

- Determine the pulley shaft rotation on the end of the pulley shaft to which the WS300 is attached.
- If the pulley shaft is rotating clockwise, connect the appropriate wire to terminal 2. If the pulley shaft is rotating counter-clockwise, connect the appropriate wire to terminal 3.
- Do not connect terminals 2 and 3 at the same time.
- Connection between the WS300 standard unit and the integrator should be made with three-wire shielded, 0.82 mm^2 (18 AWG) cable.
- Ground shield of cable at integrator only.
- Connect shield to appropriate terminal at the integrator.

Terminal Connections to integrator

WS300	1 +V	2 CW	3 CCW	4 Cmn	GND
Milltronics BW500	19	16	16	17	N/C
SIWAREX FTC	CI+, 1L+	CI-	CI-	1M	N/C
SIWAREX WP241	1L+	DI.0	DI.0	2M, 1M	N/C

Connections (IS)

Description	Terminal
5 ... 16 V DC, 25 mA max. (from IS Switch Isolator)	1
Speed out	2
Ground	GND

- Only terminals 1 and 2 are required; rotation in a clockwise or counter-clockwise direction is not required.
- To connect the switch isolator, use two-wire shielded 0.324 mm^2 (22 AWG) cable. Use the same cable to connect the switch isolator to the integrator.
- Ground shield of cable at integrator only.
- Connect shield to appropriate terminal at the integrator.

Terminal Connections to integrator

W300 IS	IS Switch Isolator Terminal	Milltronics BW500	SIWAREX FTC	SIWAREX WP241
1	3			
2	1			
	7	16	1L+	1L+
	8	17	CI+	CI+

Connect CI- to Common

ICS Schneider Messtechnik GmbH
Briesestraße 59
D-16562 Hohen Neuendorf / OT Bergfelde

Tel.: 03303 / 504066
Fax: 03303 / 504068

info@ics-schneider.de
www.ics-schneider.de